Uncontrolled Copy

REV	ECO	REV BY	DATE	APPD	DATE
C	ECO-0054840	J. JOHNS	9/9/2014	J. MINOGUE	9/9/2014

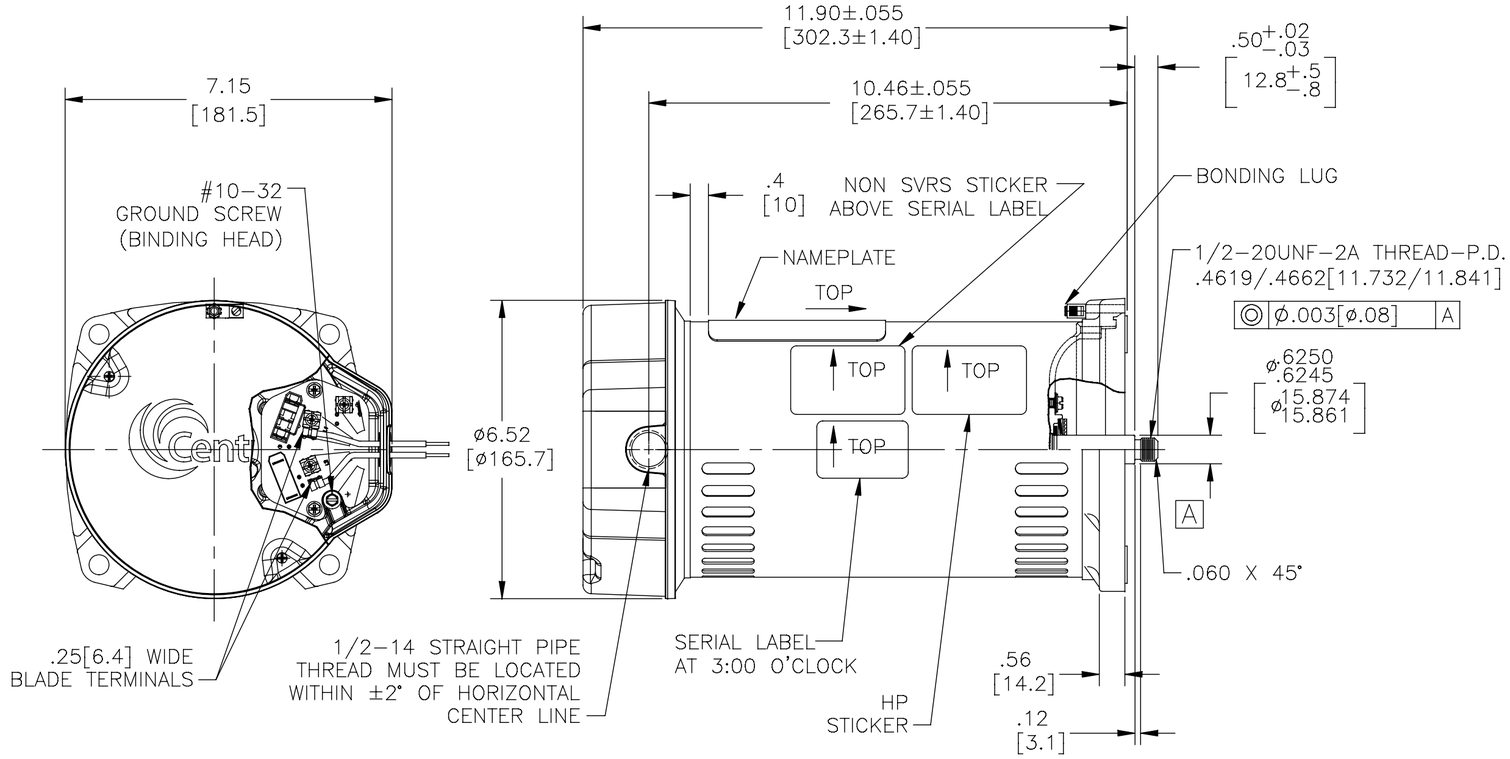

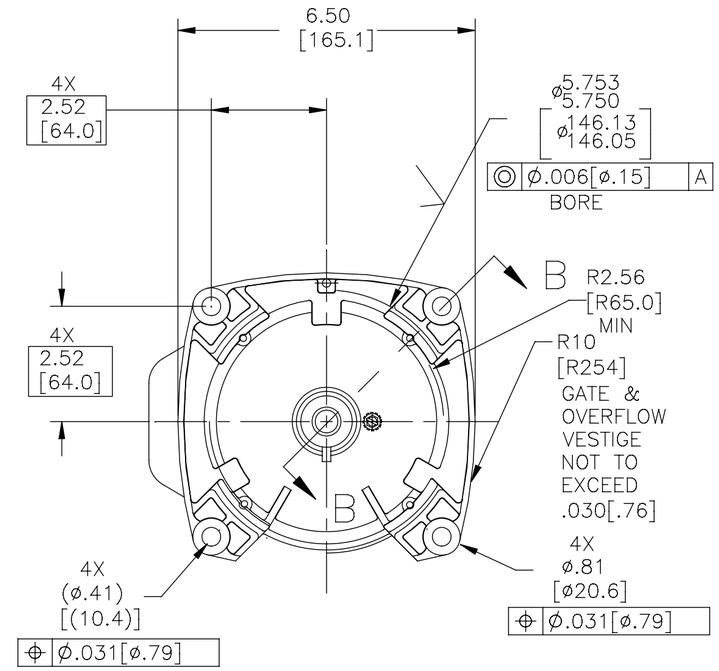

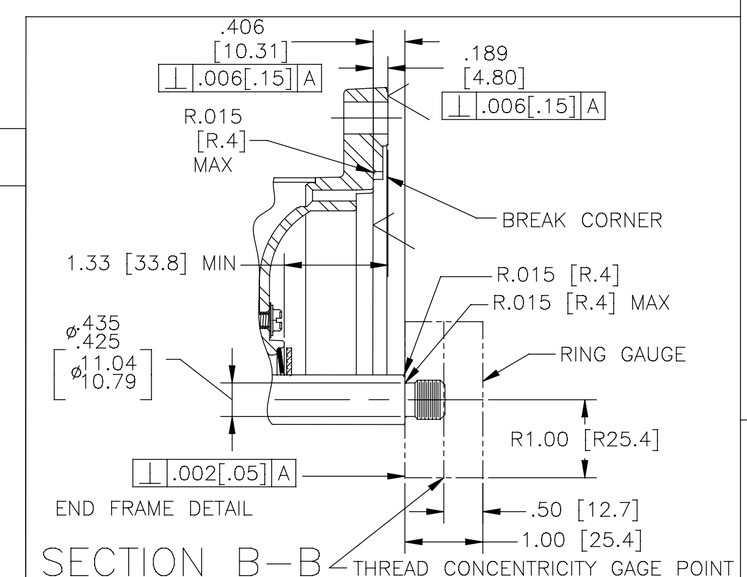

NAMEPLATE DATA

MODEL: C48AB44A01
CUST PN: HSQ095
HP: 0.95 SF: 1.00
ROT: CCWPE
RPM: 3450
TYPE: C CODE: G
FORM: FRAME: 48 Y
VOLTS: 115/230
AMPS: 12.2/6.1
MAX AMPS: –
SF AMPS: –
PH: 1 HZ: 60
INS: B AMB: 50°C
DUTY: CONT
ENCLOSURE: ODP
THERMALLY PROTECTED

EXTERNAL CONNECTION DIAGRAM

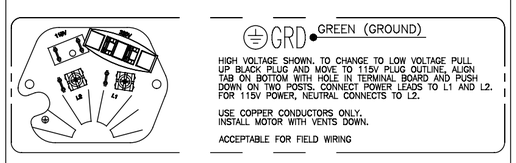

D0000312-001

NOTES

1. FINISH PAINT TO BE SATIN BLACK.
2. .44[11.2] WRENCH FLATS ON SHAFT–FOR ACCESS TO THIS WRENCH FLAT REMOVE END COVER.
3. STAINLESS STEEL SHAFT EXT.
4. LIMITS ON AMPLITUDE OF VIBRATION MEASURED AT BEARING HOUSING = .001.
5. CONNECTED FOR 230 VOLTS. QUICK VOLTAGE CHANGE DIAL INCLUDED ON THE TERMINAL BOARD.
6. SUPPORT PAD TO BE PACKED WITH EACH MOTOR

PERFORMANCE CURVE		APPROVED SAMPLE	
C48J2W41		OER-0004101	
UL COMPONENT		CSA	
FILE#	CCN#	FILE#	GUIDE#
E25022	XEWR2	LR43341	4211-01
CUSTOMER	DIST. SERVICES		

GEOMETRIC CHARACTERISTICS & SYMBOLS
FLATNESS
STRAIGHTNESS
ANGULARITY
PERPENDICULARITY (SQUARENESS)
PARALLELISM
ROUNDNESS (CIRCULARITY)
CYLINDRICITY
PROFILE OF ANY SURFACE
PROFILE OF ANY LINE
RUNOUT
TRUE POSITION
CONCENTRICITY
SYMMETRY
ASME Y14.5M 1994

UNLESS OTHERWISE SPECIFIED
DIM. TOLERANCES ARE AS FOLLOWS:

	X	XX	XXX	XXXX
INCH	±.1	±.02	±.005	±.0005
mm	±0.5	±0.13	±0.013	

ANG. ±.50 DEG
REMOVE BURRS & BREAK SHARP EDGES:
INCH .003–.015 mm 0.1–0.4
CORNER FILLETS TO:
INCH .020 mm 0.5
MACHINE SURFACES:
INCH 125 mm 3.2
METRIC DIMS. SHOWN IN [BRACKETS]

DR BY: J. JOHNS	12/14/2011		
APPD: FS3	12/14/2011		
THIRD ANGLE PROJECTION		EDS DATE	11-11-2011
		FORMAT REV	H

CONFIDENTIAL: THIS DRAWING AND ITS INFORMATION ARE THE EXCLUSIVE AND CONFIDENTIAL PROPERTY OF REGAL–BELOIT CORPORATION AND ARE NOT TO BE DISCLOSED, DUPLICATED, DISTRIBUTED OR OTHERWISE USED WITHOUT THE WRITTEN CONSENT OF REGAL–BELOIT CORPORATION. –ALL RIGHTS RESERVED.

REGAL **REGAL-BELOIT CORPORATION**

DESCRIPTION
MODEL–PFHP–48FR
OUTLINE

SIZE C | DWG NO HSQ095
SCALE NONE | SHEET 1