Logo

NATURAL WONDERS

WATERFALLS | DECK JETS | SCONCES

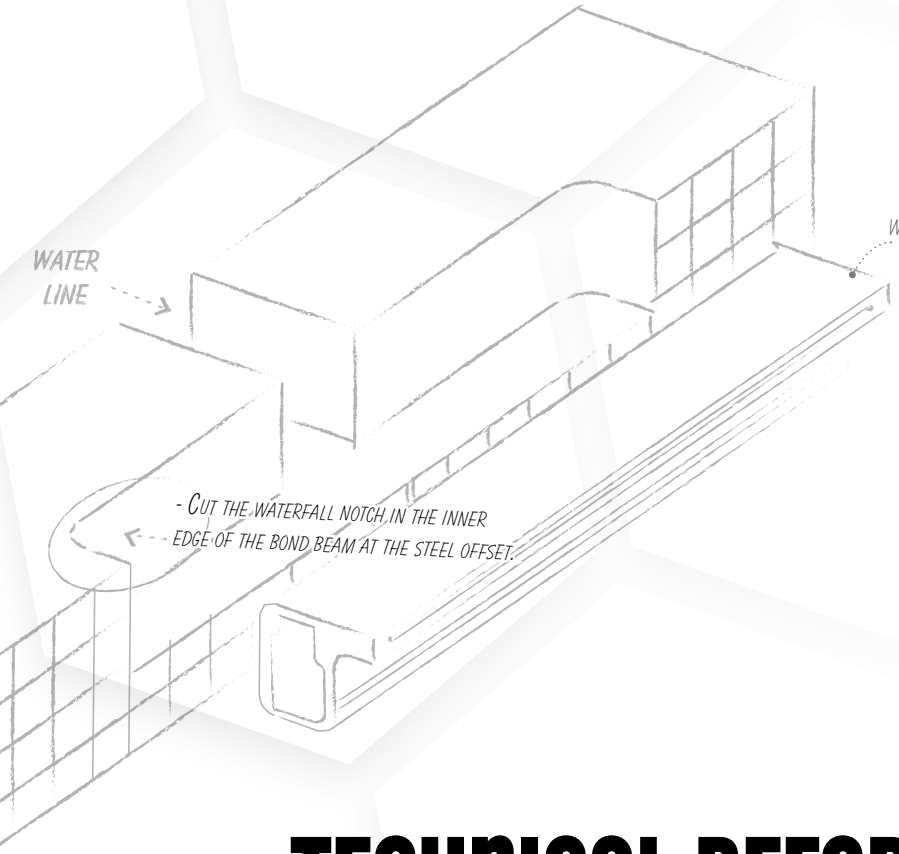

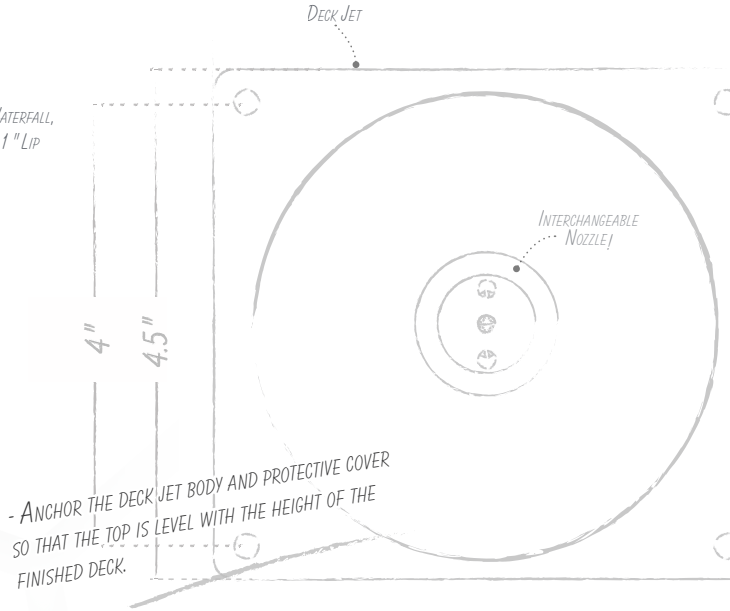

TECHNICAL REFERENCE GUIDE

Title

First Edition

CMP POOL PRODUCTS

WATERFALLS COLLECTION

Four distinct waterfall styles mean you have a water feature option for every pool. Natural Wonders waterfalls are available with lip lengths up to 12" deep and widths up to 92" wide, depending upon style. Custom factory cut radius curves are also available on select styles. Each style offers a completely unique look to complement your pool designs.

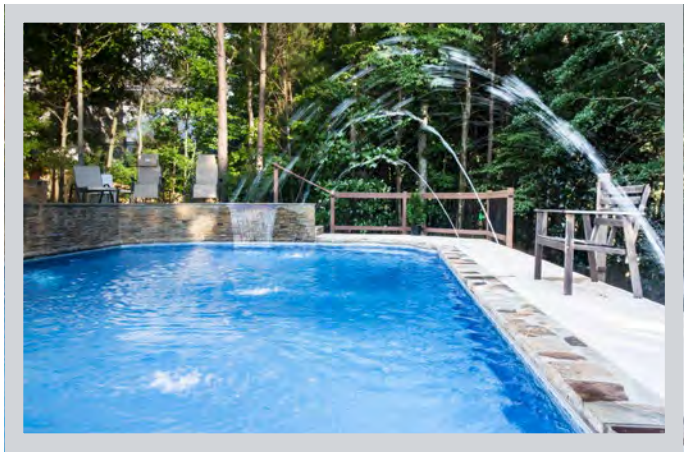

DECK & WALL JETS COLLECTION

A complete collection of deck and wall jet fountains, available with exclusive adjustability at the jet. In addition to standard deck jets, we offer the Multi-Nozzle deck jet for exciting fountain effects, and the Brass Two-Tier Fountain for a high-end tiered water feature effect.

DECORATIVE SCONCES COLLECTION

Natural Wonders Wall Sconces combine the sounds of falling water with the beauty of classic sconce styles. Our collection is available with natural matte and metallic finishes. With twelve different sconce styles and seven different finishes you can have a completely unique style perfectly matched to any pool design.

IMPORTANT: Natural Wonders™ water features are to be used only with filtered water. Use the pool system filter or see the CMP water feature filter. For waterfalls, the rock trap is always recommended to capture large debris in the pipes.

TABLE OF CONTENTS

WATERFALLS 4

PERFORMANCE GUIDE..... 5
DIMENSIONS..... 6
PLUMBING GUIDE..... 7
INSTALLATION GUIDE..... 8
FAQ..... 11
METAL FACEPLATES..... 12

DECK & WALL JETS 13

DIMENSIONS & PERFORMANCE..... 14
INSTALLATION GUIDE..... 15
FAQ..... 18
LAMINAR DECK JET..... 19

DECORATIVE SCONCES 21

INSTALLATION GUIDE..... 22

Your customers are asking for water features that can make their pool unique. Natural Wonders™ is the premier choice for a complete collection of pool water features and accent decor. We are proud to be the "go-to" option for thousands of customers every year who want the best for their backyard pool designs.

CMP is committed to supporting pool professionals with systems and programs that set you up for success. Because when the difference is in the details, everything matters®.

everything matters.

WATERFALL STYLES

CLASSIC WATERFALL

- Four color options including clear
- Heavy-Duty PVC construction
- Requires only one GPM per inch
- 6", 9" & 12" can be radius cut
- Bottom Port available in sizes below 48"

ARCH WATERFALL

- Heavy-Duty white PVC construction
- Lip cannot be radius cut
- Back or Bottom Port

STREAMFALL

- Wide openings prevent clogging
- Individual streams 1/4" × 1/2"
- Heavy-Duty white PVC construction
- Lip can be radius cut
- Back Port 1.5" spigot
- 6-20 GPM per foot

RAINFALL

- Two rows of water streams
- Clear lip face
- Heavy-Duty white PVC construction
- Lip cannot be radius cut
- Back Port 1.5" spigot
- 6-15 GPM per foot

For a complete list of waterfall options and part numbers, see the CMP Pool Products Catalog or visit www.c-m-p.com.

WATERFALL PERFORMANCE GUIDE

WATERFALL PERFORMANCE										
RESULTS AT 40IN HEIGHT		12"	18"	24"	36"	48"	60"	72"	84"	96"
CLASSIC	GPM (+/-1)	12 gpm	18 gpm	24 gpm	36 gpm	48 gpm	60 gpm	72 gpm	84 gpm	96 gpm
	PROJECTION	14"	12"	13"	13"	17"	18"	14"	15"	17"
STREAMFALL	GPM (+/-1)	10 gpm	10 gpm	15 gpm	21 gpm	35 gpm				
	PROJECTION	19"	16"	15"	15"	20"				
RAINFALL	GPM (+/-1)	10 gpm	n/a	23 gpm	32 gpm	43 gpm				
	PROJECTION	22"	n/a	18"	18"	20"				
ARCH FALL	GPM (+/-1)	14 gpm	22 gpm	26 gpm	35 gpm	43 gpm				
	ARCH HEIGHT ABOVE LIP	1.5"	1.5"	1.5"	1.5"	1"				
	PROJECTION	17"	17"	15"	15"	12"				

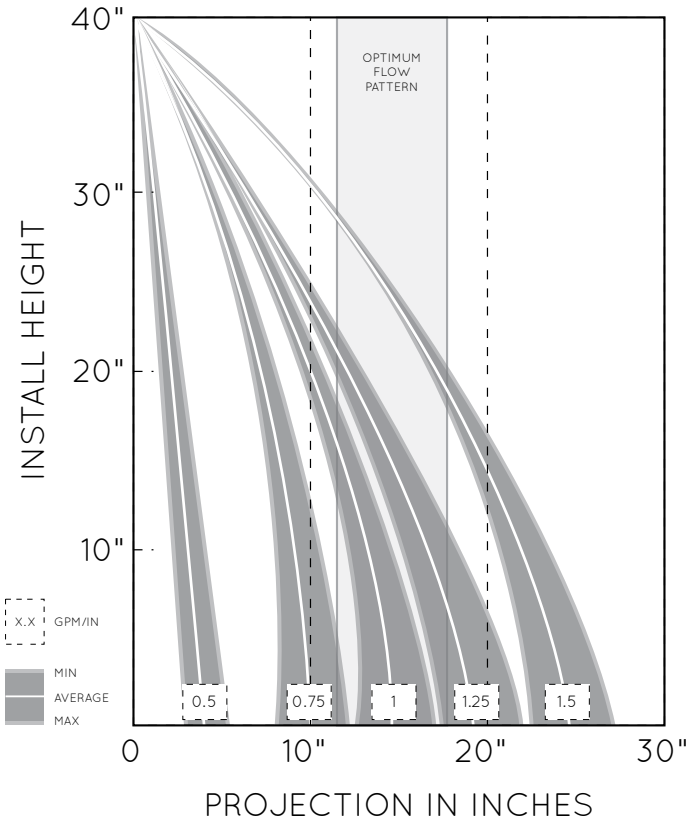

GRAPH REPRESENTS PROJECTION RANGE, NOT STREAM PATTERN

12" & 18" STYLES
At the tested 40" height, the flume on these sizes of classic waterfall is very narrow. For a more traditional appearance, we recommend the 12" at 18" max height (8" projection) and 18" at 24" max height (9" projection).

TEST CONDITIONS
Testing was performed in a laboratory setting under optimum conditions. Environmental factors such as weather, construction method and hydraulic variations can alter flow and appearance.

EXTENDED HEIGHTS AND PROJECTION
For a more dramatic effect, it is possible to achieve increased projection and heights above 40" by increasing the gallons per minute. Results outside of tested parameters may vary.

TYPICAL FLOW PERFORMANCE AT 50 FEET OF HEAD						
	1/2 HP	3/4 HP	1 HP	1.5 HP	2 HP	3 HP
FLOW RATE (GPM)	26 gpm	58 gpm	68 gpm	93 gpm	106 gpm	140 gpm

MAXIMUM RECOMMENDED FLOW BY PIPE SIZE				
	0-60 GPM	61-100 GPM	101-140 GPM	141-225 GPM
PLUMBING SIZE	1.5" PIPE	2" PIPE	2.5" PIPE	3" PIPE

WATERFALL DIMENSIONS

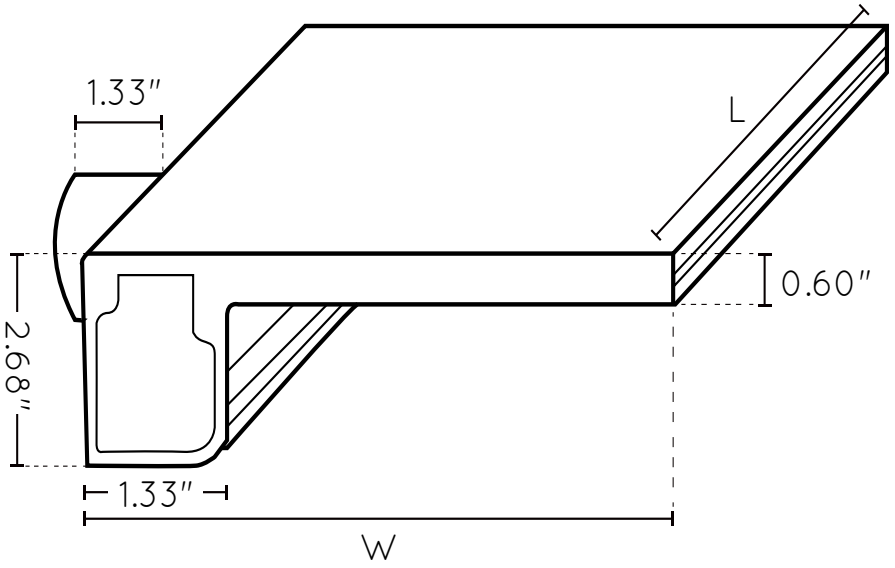

WATERFALL LENGTH (L)									
STYLE	12″	18″	24″	36″	48″	60″	72″	84″	96″
CLASSIC	12.36″	18.23″	24.13″	35.67″	47.36″	59.88″	71.57″	83.24″	95.13″
STREAMFALL	12.6″	18.5″	24.5″	35.18″	47.5″				
RAINFALL	12.75″	—	25.25″	37.875″	50.25″				
ARCH FALL	12.75″	18.5″	24.5″	36.12″	47.8″				

WATERFALL WIDTH (W)			
1" LIP	6" LIP	9" LIP	12" LIP
3.15″	8.07″	11.07″	14.07″

All "L" dimensions are +/- 0.33"

WATERFALL BODY DIAGRAM

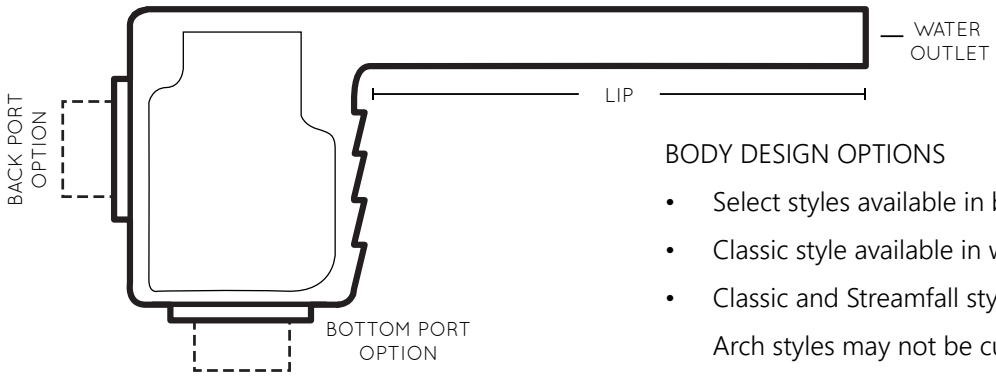

BODY DESIGN OPTIONS

- Select styles available in back *or* bottom port.
- Classic style available in white, gray, tan or clear.
- Classic and Streamfall style lip may be cut. Rainfall and Arch styles may not be custom cut.

WATERFALL PLUMBING GUIDE

RECOMMENDED PIPE CONFIGURATION

2-WAY VALVE

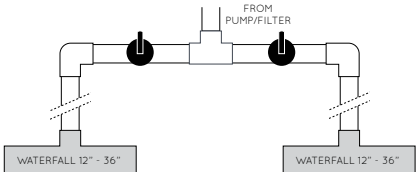

PLUMBING WATERFALLS UP TO 36" LONG

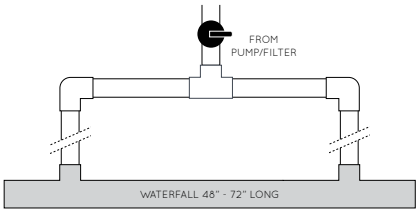

PLUMBING WATERFALLS 48" - 72" LONG

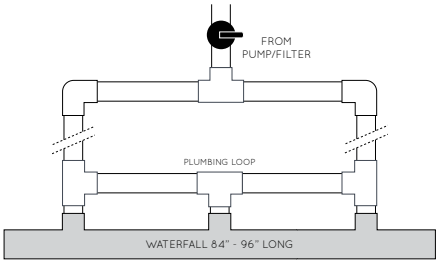

PLUMBING WATERFALLS OVER 72" LONG

INLET SPACING GUIDE

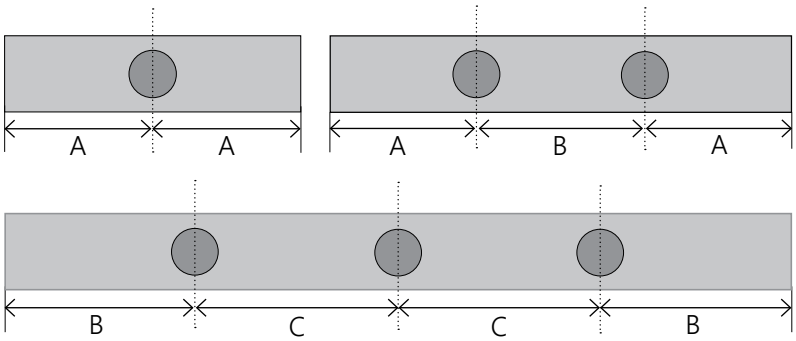

	A	B	C
12"	6-11/32"	—	—
18"	9-9/32"	—	—
24"	12-3/16"	—	—
36"	18-1/8"	—	—
48"	15-1/16"	18-7/16"	—
60"	18-1/4"	23-11/32"	—
72"	19-27/32"	31-15/16"	—
84"	—	18-1/32"	23-5/8"
96"	—	19-31/32"	7-9/16"

BASIC SYSTEM DIAGRAM

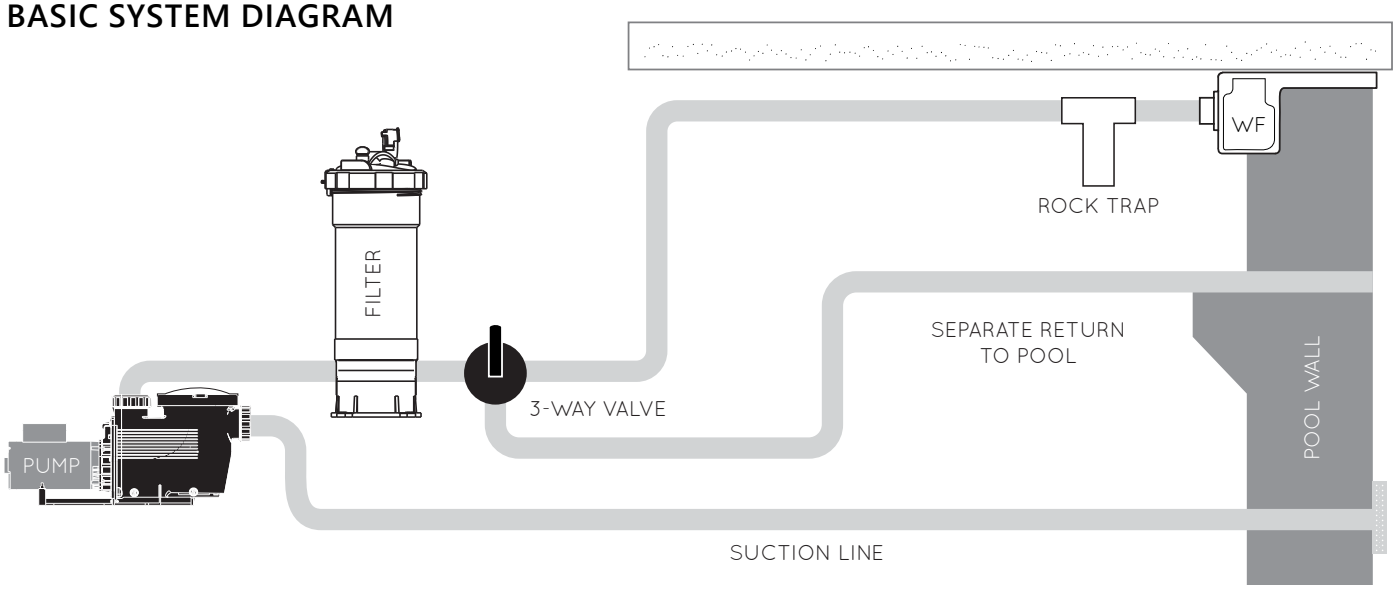

Diagram is not to scale. For reference only

MINIMUM PIPE SIZE
Use a minimum of 1-1/2" PVC pipe for all waterfalls. Use a minimum of 2" pipe for runs longer than 60' in length or for waterfalls over 60" long. Dedicated waterfall plumbing lines are recommended for best results.

INLET QUANTITY
Waterfalls up to 36" have one inlet. Waterfalls from 48" - 72" have two inlets. Waterfalls 84" - 96" have three inlets.

WATERFALL INSTALLATION GUIDE

WATERFALL BODY INSTALLATION

Mark off the installation area prior to construction. When ready for rebar, mark the exact location of the waterfall. The steel pattern should be offset by 3" to the bottom and by 1" outside the length of the waterfall. (Example: if the waterfall is 24" long, the steel pattern should offset to 3" down from the top and 26" in length - see *Fig. 1*)

STEEL OFFSET *FIGURE 1*

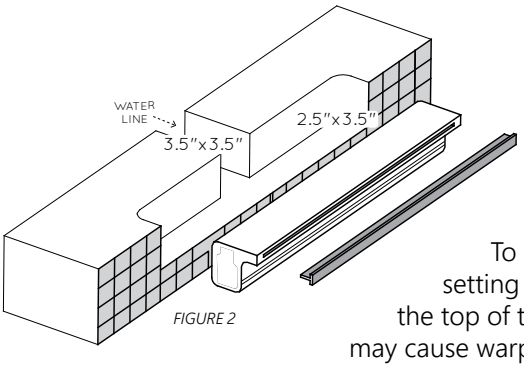

FIGURE 2

Cut the waterfall notch in the inner edge of the bond beam at the steel offset. The notch should be 3-1/2" deep by 2-1/2" wide and 2" longer than the length of the waterfall (1" longer on each end). Cut notches for 1-1/2" plumbing behind the waterfall notch. Waterfalls have one to three ports, depending on size. Refer to the waterfall diagrams in this guide for notch and plumbing placement. Larger waterfalls will require multiple water lines. Each plumbing notch should be 3-1/2" wide by 3-1/2" deep. *(Fig. 2)*

To assist in securing the waterfall until the concrete cures cover the finished setting with a piece of plywood (1/2" or 3/4" thick). Place heavy blocks evenly across the top of the plywood. This will also protect the waterfall from heat and sunlight which may cause warping.

Always install the waterfall before the pool deck or coping. Place the waterfall in the notch cut in the bond beam. Using shims of tile, make sure the top of the waterfall is level with the upper edge of the bond beam. Fill gaps around the unit and coat the face of the waterfall with concrete or similar material in preparation for the tiles. Cut the tile to fit under the lip of the waterfall using thin set or similar substance to secure in place. *(Fig. 3)*

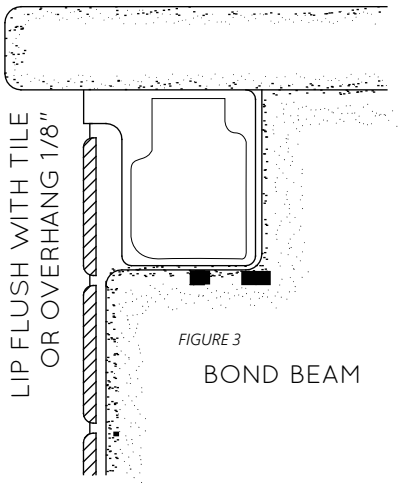

FIGURE 3

WATERFALL PLUMBING

The line from the pump to the waterfall should use a minimum of 1-1/2" PVC pipe. The feed line should terminate near the center of the waterfall at the back of the bond beam.

Use a 3-Way Valve as a "tee" from the return line of the pool to the waterfall for flow regulation. Locate the valve after the filter near the equipment pad.

When plumbing two or more waterfalls follow all of the previous instructions with the addition of a CMP 2-way Hydroseal Valve for each waterfall to balance the water flow between the units.

If multiple waterfalls are installed a separate pump is recommended. This will also require a separate suction line to be plumbed. Plumb the dedicated pump and suction with a minimum of 2" PVC pipe. At least two anti-vortex suction covers must be used to prevent possible entrapment. It is recommended to mount the anti-vortex cover 18" above the bottom of the pool. Use a filter between the pump and the waterfall in this plumbing situation. Installations requiring more than 60 gallons per minute may require two or more filters plumbed in parallel. Use a separate line with a 3-way valve to balance water between each waterfalls. *(see plumbing guidelines)*

Once the pool construction is complete and the pool is filled with water you may remove the protective tongue. Check the spillway for debris and activate the waterfall. If the waterfall is plumbed with the main filter pump, turn on the pump and run for five minutes to clear the lines of air and debris. Open the regulating valve to slowly adjust the flow of the water until the sheeted water reaches the desired location on the pool surface.

If the waterfall is plumbed with a separate pump, open all the valves and make sure all the lines are free and clear of debris. Start the dedicated pump and let the water circulate through the system for five minutes to clear the lines of air and debris. Adjust the valve to each waterfall to the desired flow.

The plumbing system must be designed to allow water to easily drain out to prevent damage from freezing. Natural Wonders waterfalls are designed to minimize the amount of water that remains in the unit when not in use if the system is plumbed correctly. Blow all the lines and follow the standard winterizing procedure when necessary.

EXTENDED LIP INSTALLATION

Some applications will require the use of the Natural Wonders Waterfall with an extended lip (such as mounting in a radius or when using brick, blocks, etc.). The standard lip is 1" while the extended version is 6", 9" or 12". Installation of the extended version is identical to the above, but the notch dimensions in the bond beam may need to be altered. The entire span of the extended lip must be supported when installed. *(Fig. 4)* NOTE: Mortar will not adhere to the unit. Consult a decking or concrete professional to find the appropriate materials for installation.

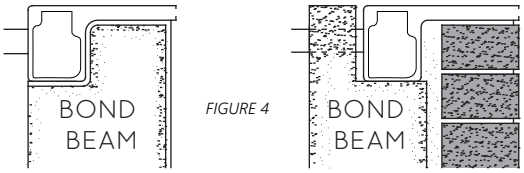

FIGURE 4

OVER BOND BEAM INSTALLATION

OVER BRICK INSTALLATION

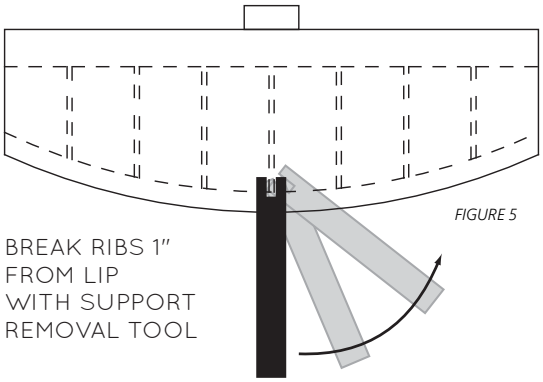

FIGURE 5

Extended lip models can be cut to custom shapes in the field for different applications. Before beginning determine how much of the lip to remove. Allow room for the tile and thin-set so the lip will still be flush or protrude slightly beyond the tile line. A minimum of 1-1/2" of length must be left in the lip after cutting. Remove the protective insert before cutting the lip. Use a coarse tooth blade, cutting carefully to avoid any jagged edges on the lip. Use the included rib removal tool to remove the ends of the exposed ribs at the edge of the cut. All ribs within 1" of the opening should be removed. *(Fig. 5)* Do not leave the broken pieces in the unit. Sand the edge as smooth as possible using a sanding block. Replace the protective insert and continue with the standard installation.

IMPORTANT ITEMS TO NOTE DURING INSTALLATION

- Each waterfall comes with a protective tongue for the water outlet and also a protective cap for the water inlet. These prevent debris from entering the unit during the installation process. These caps should never be removed from the unit until the equipment is ready to run. Failure to do so can cause permanent damage to the waterfall.
- Each unit comes with an optional screen that can snap into the water inlet for additional filtration if desired. Our recommendation is to use a pool filter whenever possible to filter the water. We do not recommend using the screen if at all possible due to excess hair or debris build-up which can affect the performance of the waterfall.
- Do not stand on, drop or step on waterfall.
- Flush the pipeline before attaching to the waterfall unit.
- Always plumb each waterfall with the included rock trap just before the water line reaches the waterfall.

ATTENTION: NATURAL WONDERS WATERFALLS MUST USE FILTERED WATER. RUNNING A WATERFALL WITH UNFILTERED WATER CAN CAUSE PERMANENT DAMAGE TO THE FIXTURE AND WILL VOID ANY MANUFACTURER'S WARRANTY ON THE PRODUCT.

CUSTOM CUT WATERFALL FORM

Speed up order processing by completing this form online. Visit c-m-p.com/custom-cut-request

COMPANY NAME _____ PHONE _____

ADDRESS _____ FAX _____

CONTACT _____ DATE _____ DISTRIBUTOR _____

FAX FORM TO 770-632-7115 OR EMAIL TO CS@C-M-P.COM

1. CHOOSE COLOR
(If Available)

White PVC ☐
Gray PVC ☐
Tan PVC ☐

2. CHOOSE LENGTH†

12" ☐ 18" ☐ 24" ☐
36" ☐ 48" ☐ 60" ☐
72" ☐ 84" ☐ 96" ☐

†Length corresponds to water only. For actual fixture measurement refer to the CMP Pool Catalog.

3. CHOOSE INLET POSITION††

1.5″ Spigot BACK ☐
1.5″ Spigot BOTTOM ☐

††12″-48″ = one port 60″-72″ = two ports 84″-96″= three ports
For Bottom Port please call for lead times

4. CHOOSE FLOW STYLE

Waterfall (Sheeting) ☐
25577-xxx-xxx
1 GPM/in

Streamfall (up to 48″) ☐
25588-xxx-xxx
6-15 GPM/ft

5. RADIUS MEASUREMENT

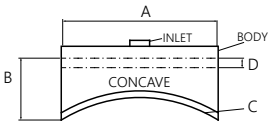

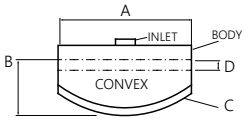

MINIMUM RADIUS

LENGTH	6" LIP	9" LIP	12" LIP
12	8.50	6.00	6.00
18	17.50	10.00	9.00
24	30.00	15.75	12.75
36	66.00	32.25	23.25
48	116.50	55.00	38.00
60	181.25	84.50	57.00
72	260.50	120.50	80.50
84	354.00	163.00	108.00
96	462.00	212.25	139.75

CONVEX ☐ **CONCAVE** ☐

NOTE MEASUREMENTS BELOW AS NEEDED:
Any custom cuts besides convex/concave require a customer template to be faxed or mailed to CMP

LENGTH (A) _____ RADIUS (C) _____

LIP (B) _____ UNCUT LIP (D) _____

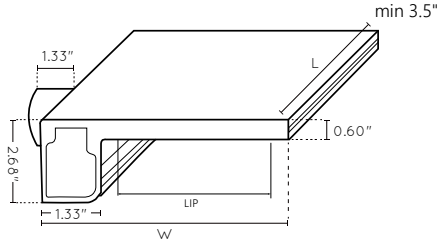

6. QUANTITY ORDERED _____

FOR CMP USE ONLY

CUSTOM PART #_____ DATE_____

DESCRIPTION_____

QUOTATION AMOUNT: $_____ ORDER #_____

Price is for cost of waterfall plus $35 up-charge for 12″-48″ lengths or $60 for 60″-96″ lengths

CUSTOMER APPROVAL SIGNATURE:_____ DATE_____

CHECK THIS FORM CAREFULLY. Custom units are non-returnable. Quotes are good for 30 days and do not include freight. This form is for quotation purposes only. A purchase order is required to begin order processing. FILTERED WATER MUST BE USED ON ALL CMP WATERFALLS.

WATERFALL FAQ & TIPS

ROCK TRAP

The rock trap is always recommended for installation. Using the rock trap will capture large debris in the pipes during installation. Rock Trap P/N 25577-950-000

FILTRATION

Natural Wonders™ waterfalls are to be used only with filtered water. Use the pool system filter or see the CMP water feature filter. Installing without a filter risks permanent damage to the waterfall and voids any CMP warranty.

WINTERIZATION

Easy winterization is possible by plumbing the unit so that water will drain easily from the waterfall configuration. Natural Wonders waterfalls are designed to minimize the amount of water that remains in the unit when not in use if the system is plumbed correctly. Blow all the lines and follow the standard winterizing procedure when necessary. To protect the waterfall body during winter, plug the slot with a winterizing guard strip. One strip is included with each waterfall. Winterizing guard strips are for use with standard waterfalls only; not compatible with Arch, Rainfall or Streamfall styles.

INSTALLATION DEBRIS

During installation, do not "drag" the pipes along the ground or in the dirt. This fills the pipes with dirt and other debris, and the waterfall will not work correctly after installation. Before installing, always flush the pipes to clear debris.

DAMAGE DUE TO HEAT EXPOSURE

Do not leave waterfalls in sunlight or hot temperatures. If warping occurs, place the unit back in the sun to soften. While still warm, immediately distribute weight evenly across the top of the waterfall and allow to cool overnight. Keep in a cool place until ready for installation.

What can I do if the waterfall has "breaks" and is no longer a smooth flow?

- Debris may be caught in the lip. Use the clean out tool or a thin flat tool to clear the lip. CAUTION: DO NOT CUT ANY SUPPORTS WHEN CLEANING.
- Check for burrs on supports in LED waterfalls. A thin hacksaw blade may be used to carefully smooth edges as needed. Do not cut the supports.
- GPM may be inaccurate. Too little flow or too much flow through waterfall prevents proper water flow. Reference the performance guide chart for proper GPM information. A dirty filter may also cause reduced flow.

Why does one waterfall have more flow than others installed in the same pool?

The supply of water is not balanced correctly. To get equal flow from each waterfall unit, adjust the valves at each waterfall until the desired flow is achieved.

What size pump is required for waterfalls?

The pump size required will vary depending on waterfall size, pipe size, plumbing, etc. The key is to reach the correct GPM for your size waterfall, between 1 and 1.25 GPM per inch.

Do I always need to use the screen and rock trap that came with the waterfall?

We do not recommend using the screen if possible. Pet hair and other fine debris can build up over time and impede the water flow. Instead a filter should be installed inline to capture debris. The rock trap is always recommended to catch large debris during installation. (see notes above)

How do I calculate a radius?

To calculate the radius, you only need to know the length of the waterfall (L) and the maximum width (W) from the center of the fall to the uncut lip. You can calculate the radius using the formula $W/2 + L^2 / 8W$. You may also use the CMP Radius Calculator tool online at c-m-p.com/support.

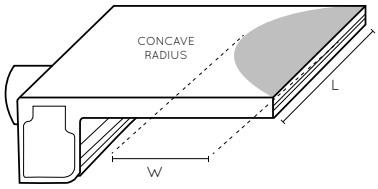

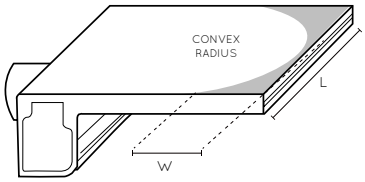

WATERFALL METAL FACEPLATE GUIDE

INSTALLATION GUIDE

1. Clean the surface of the waterfall lip. Make sure there is no debris, silicone or other material covering the lip. Before beginning the lip should be completely dry.
2. Installation is designed to be permanent. Before installing, pull back just the edge of the protective tape on the front to make sure the waterfall plate is the correct style.
3. Turn plate over and remove RED tape on back of the plate to expose the adhesive. Leave the protective tape on the other side in place until after plate is installed.
4. Carefully place the plate over opening. Do not press down until you are sure the plate is directly over the opening and is covering all of the waterfall face. Use the lip guard if it is still available.
5. Once you are sure the plate is positioned correctly, press firmly to permanently secure to the waterfall.

FREQUENTLY ASKED QUESTIONS & TIPS

WARNING: Edges are very sharp, please use care when handling and installing. Wearing gloves during installation is suggested.

One of the best ways to get a perfect installation is by using the green lip guard/winterizing guard included with each waterfall. If a lip guard is not available, they may be purchased separately.

Can a metal faceplate be installed on a curved waterfall?
Metal faceplates for custom curved waterfalls are not available.

What color and material options are available?
Currently faceplates are available in copper, bronze and stainless steel.

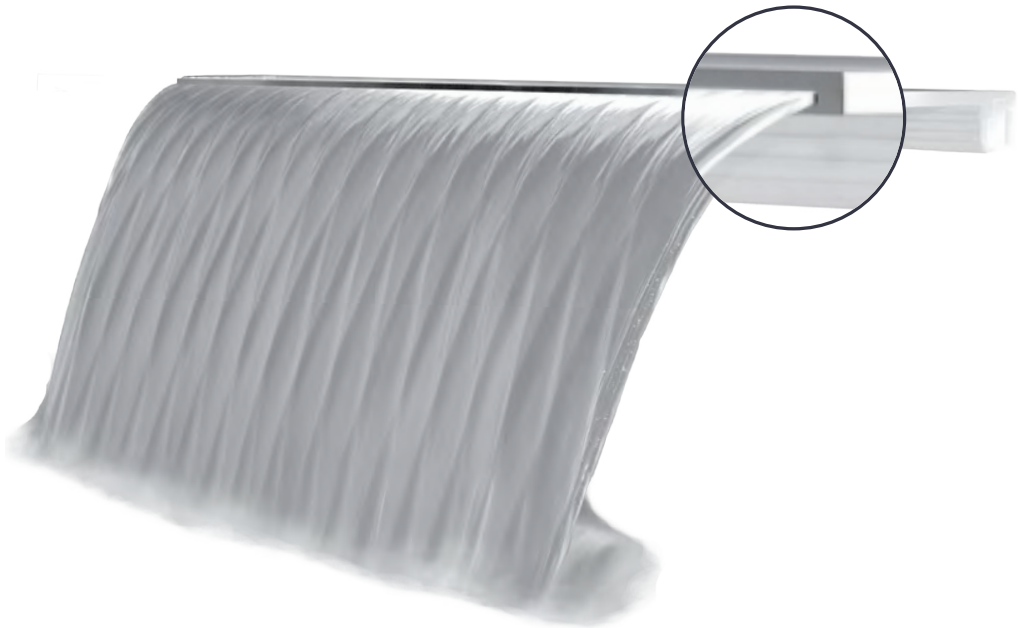

MULTI-NOZZLE STYLES

MULTI-NOZZLE VINYL LINER WALL JET

- Installs similar to a standard pool return
- Includes five interchangeable nozzles
- Six color options available
- Non-adjustable design

MULTI-NOZZLE DECK JET

- Five color & finish options
- Multiple flange and cover options
- Includes five interchangeable nozzles
- Adjustable at the jet

3/16" SINGLE | 1/4" SINGLE | 5/16" SINGLE | FAN STREAM | TRIPLE STREAM

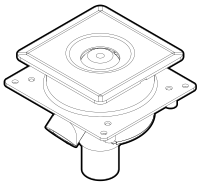

MULTI-NOZZLE DECK JET SQUARE COVER W/ FLANGE

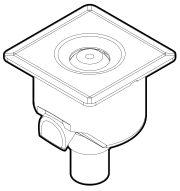

MULTI-NOZZLE DECK JET SQUARE COVER FLANGELESS

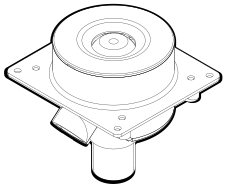

MULTI-NOZZLE DECK JET ROUND COVER W/ FLANGE

MULTI-NOZZLE DECK JET ROUND COVER FLANGELESS

DECK & WALL JET STYLES

DECK JETS

- Adjustable & non-adjustable styles
- Non-adjustable includes two nozzles
- Includes four decorative caps
- For pool deck installation only

WALL JETS

- Models for gunite and fiberglass pools
- Adjustable & non-adjustable styles
- Non-adjustable includes two nozzles
- Includes four decorative covers

For a complete list of deck& wall jet options and part numbers, see the Pool Products Catalog or visit www.c-m-p.com.

U.S. Patents #8,366,016 & #8,500,037

DECK JET DIMENSIONS & PERFORMANCE

MULTI-NOZZLE DECK JET PERFORMANCE (DISTANCE)							
STYLES		2 FT	3 FT	4 FT	5 FT	6 FT	7 FT
FAN	GPM	—	1 gpm	1.2 gpm	1.3 gpm	1.5 gpm	1.9 gpm
	PSI	—	1.8 psi	2.2 psi	2.6 psi	3.6 psi	4.8 psi
	SPREAD	—	12"	24"	36"	60"	96"
	HEIGHT	—	12"	18"	24"	36"	48"
TRIPLE STREAM	GPM	1.3 gpm	1.6 gpm	1.9 gpm	2.2 gpm	2.5 gpm	2.8 gpm
	PSI	2 psi	2.5 psi	3.5 psi	4.2 psi	5 psi	6 psi
	SPREAD	8"	12"	18"	20"	24"	30"
	HEIGHT	9"	14"	20"	24"	30"	36"
3/16" SINGLE	GPM	0.4 gpm	0.5 gpm	0.7 gpm	0.7 gpm	0.8 gpm	0.9 gpm
	PSI	1.5 psi	2 psi	2.5 psi	2.8 psi	3.2 psi	3.6 psi
	HEIGHT	10"	15"	21"	25"	31"	38"
1/4" SINGLE	GPM	1.2 gpm	1.5 gpm	1.8 gpm	2.0 gpm	2.0 gpm	2.5 gpm
	PSI	2 psi	2.5 psi	3.2 psi	4.0 psi	4.6 psi	5.5 psi
	HEIGHT	10"	16"	22"	27"	32"	40"
5/16" SINGLE	GPM	1.5 gpm	1.9 gpm	2.3 gpm	2.6 gpm	2.9 gpm	3.2 gpm
	PSI	1.5 psi	2 psi	2.5 psi	2.8 psi	3.2 psi	3.6 psi
	HEIGHT	10"	15"	21"	25"	31"	38"

DECK JET PERFORMANCE			
	3 GPM	4 GPM	5 GPM
HEAD	3.9 FT	7.9 FT	11 FT
HEIGHT	3 FT	6.5 FT	10 FT

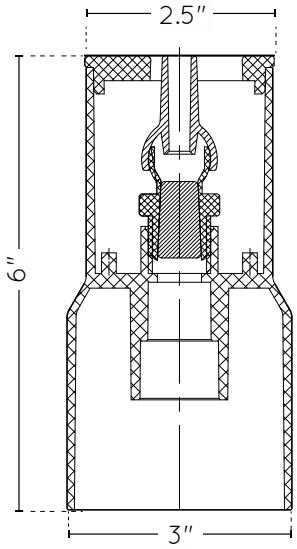

DECK JET SIDE VIEW

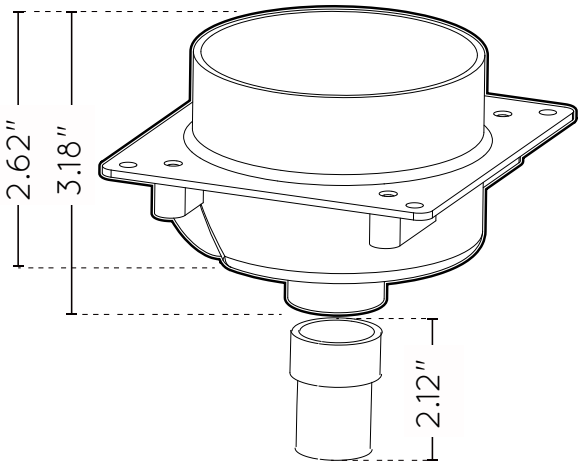

MULTI-NOZZLE DECK JET
SIDE VIEW

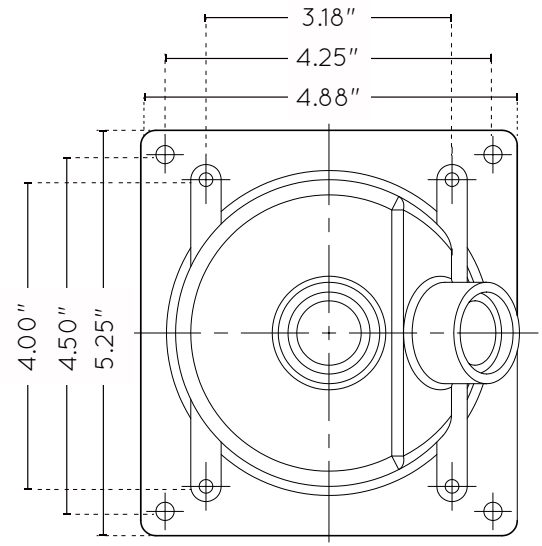

MULTI-NOZZLE DECK JET
BOTTOM VIEW

DECK JET INSTALLATION GUIDE

PLUMBING AND DECK INSTALLATION

1. Determine the proper size of the main feed pipe: Use 1-1/2" pipe for up to 8 deck jets; Use 2" pipe for up to 12 deck jets; Use 2-1/2" pipe for up to 16 deck jets.
2. Install a ball valve on the main feed pipe near the pump to adjust the total water pressure.
3. Reduce to 3/4" pipe. (Non-adjustable deck jets can also use a 1/2" water line) When installing more than one deck jet use either individual valves for each jet or create an equal pressure loop to equalize the pressure in the line.
4. The body is designed to allow for plumbing with straight pipe or an elbow. Use only PVC/ABS glue to secure the pipe to the body.
5. Anchor the deck jet body and protective cover so that the top is level with the height of the finished deck.
6. Remove the protective cover. Wrap the threaded plug with Teflon™ tape and install into the deck jet body. Do not over tighten. Leave the plug installed and keep the pipe pressurized during installation.
7. Replace the protective cover. Use the included black cover to protect deck jet during installation and when laying deck. Remove this cover only after the deck has been installed.

NOZZLE INSTALL & STREAM ADJUSTMENT

8. Once the deck is finished, remove the protective label from the cover, remove the cover and remove the plug.
9. Turn on the pump, open the valves and run water through the lines to remove any debris that may have collected.
10. Wrap the threads on the jet nozzle base with Teflon™ tape and install in the body. Tighten until the base is fully seated in the body.
11. **Multi-Nozzle Deck Jet Only**: Take the jet nozzle housing assembly and install in the body by turning the installation tabs. Hand tighten only. *Do not over-tighten*.
12. Adjust the position of the nozzle and adjust any valves in the line to achieve the desired flow.
13. **Adjustable Deck Jets Only:** To balance the flow between multiple deck jet, the nozzle may be turned by hand or by using the wrench provided by inserting over the nozzle and turning to adjust the flow (clockwise for more flow, counter-clockwise for less). Do not over-tighten nozzle when adjusting flow.
14. If the stream is disrupted, remove the jet nozzle and check for debris.
15. **Multi-Nozzle Deck Jet Only:** To change the eyeball nozzle, remove the retaining ring, remove eyeball and replace with new eyeball option.

MULTI-NOZZLE DECK JET NOZZLE HOUSING.

VINYL LINER WALL JET INSTALLATION GUIDE

The vinyl liner wall jet must be mounted vertically in a pool wall above the water line.

1. Determine the water level of the pool and the vertical center line of each wall jet. If water covers the nozzle the jet will not operate correctly. In addition, if it is mounted too close to the coping the performance will also be affected.
2. Install the jet body as you would a typical in ground vinyl liner return fitting with combo nut.
3. Plumb fitting with a ball valve in line to control flow to each jet.
4. Install the pool liner as you would normally.
5. Install with face plate and gasket.
6. Place filter foam into fitting.
7. Thread the threaded ring into fitting.
8. Place desired eyeball nozzle into fitting with the flat side facing out.
9. Check to make sure seal gasket is inside flange then thread flange into place.
10. To change the eyeball nozzle for different fountain effects, remove the flange, remove eyeball and replace with new eyeball option.

NOTES: These eyeball nozzles do not require high GPM to operate. Use the in line ball valve adjust flow and create desired effect. Hand tighten flange. If leakage occurs, tighten slightly. DO NOT OVER-TIGHTEN.

Eyeball Nozzles are included in five different spray patterns: Fan Spray, 3 Stream, 3/16" Stream, 1/4" Stream, 5/16" Stream

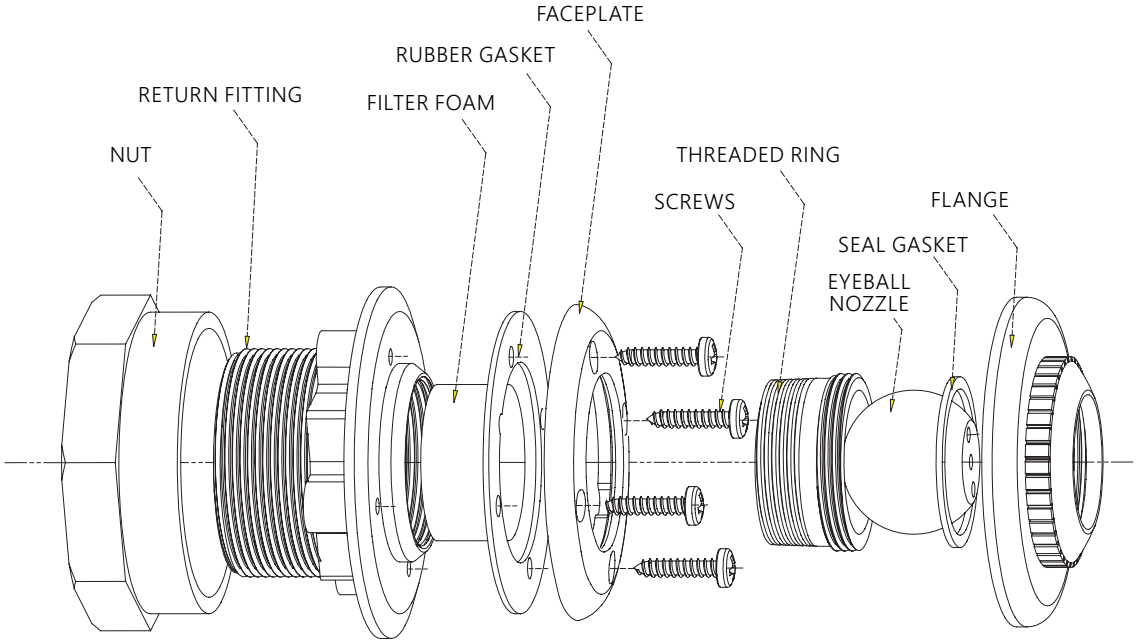

FIBERGLASS OR GUNITE WALL JET INSTALLATION GUIDE

The fiberglass or gunite wall jet models should be mounted vertically in a pool wall *above the water line*.

WALL MOUNT PLACEMENT INSTRUCTIONS

Before beginning, determine the water level of the pool and the vertical center line of each wall jet. If water covers the nozzle the jet will not operate correctly. In addition, if it is mounted too close to the coping the performance will also be affected.

1. Layout the center lines of the wall jet to coordinate with the pattern of the pool tiles.
2. OPTION 1: FIBERGLASS WALL JET INSTALL
   - Drill a 4" hole in the wall to install the wall jet.
   - Use one of the spacer gaskets or the template supplied to drill four holes for the mounting screws. Reference the four inside holes on the gasket, *not* the four outside holes.
   - Determine how many spacer gaskets are needed to have the wall jet body flush with the wall.
   - Thread in the screws to secure the body to the pool.

   OPTION 2: GUNITE WALL JET INSTALL
   - Cut a 6" × 6" notch in the beam and attach the feed pipe. Make sure the pipe extends past the beam.
   - Making sure the part is level, mud the wall jet into place. During the settling process plumb the lines. Use the supplied coupling to plumb 1/2" or 3/4" pipe using ABS to PVC glue.
   - A standard 1" coupling may also be used to plumb with 1" pipe.
   - The flange may be trimmed if it inhibits alignment. Leave at least 1/2" of flange to function as a water stop.

WALL MOUNT PLUMBING INSTRUCTIONS

1. Reduce the piping to either 1", 3/4" or 1/2" pipe. When installing more than one wall jet use either individual valves for each jet or create an equal pressure loop to equalize the pressure in the line.
2. Remove the cover, wrap the threaded plugs with Teflon™ tape and install into the wall jet body. *Do not over tighten*. Replace the cover. Leave plugs installed and keep the pipe pressurized during installation. After installation, remove plug connected to plumbing; leave other plug in place.
3. Turn on the pump, open the valves and run water through the lines to remove any debris.
4. Wrap the threads on the jet nozzle base with Teflon™ tape and install in the body. Tighten until the base is fully seated in the body.
5. Snap the jet nozzle onto the jet nozzle base (no tools necessary), adjust the position and adjust any valves in the line to achieve the desired flow.
6. If the stream is disrupted, remove the jet nozzle and check for debris.

DECK & WALL JET FAQ & TIPS

What is the connection size at the deck jet body?

For adjustable deck jets only use a 3/4" pipe or 3/4" 90 degree elbow into the deck jet body (and make sure to use ABS to PVC glue). Non-adjustable deck jets can also use a 1/2" line.

Is an inline valve required for adjustable model deck and wall jets?

The nozzles are designed to adjust to get a desired look with a reasonable amount of water going to the Deck Jet (3 to 6 GPM). It is still necessary to use a valve in the line to control the amount of water going to the Deck Jet or Jets if multiple jets are used in a line.

When adjusting multiple Deck Jets, keep in mind the water has to "go somewhere." For example, picture a three deck jet installation. If two have a five foot high stream and one has a nine foot high stream, turning down the nine feet high stream will make the other two more powerful. Once the flow is equal to all jets, to make them *all* five feet high the in line valve would have to be adjusted.

What is the best way to install the deck jet nozzle? Can I do it "by hand?"

Use only the CMP Deck Jet Nozzle wrench (25597-204-010) provided to install and remove the nozzle.

What is the best way to winterize a deck jet?

To winterize the deck jet, first remove the jet nozzle using the jet nozzle removal tool. (25597-304-010) Remove the jet base, blow air through the lines and install the plug.

LAMINAR DECK JET

The Natural Wonders™ Laminar Deck Jet is a precision engineered water feature, designed for high performance and ease of service. A laminar creates a large, smooth rod of water as opposed to the more playful stream of a standard deck jet. The advanced design features multiple innovations including a stainless steel nozzle, tangential flow engineering and low-maintenance filter media.

The Laminar Deck Jet has been carefully developed by CMP engineers to achieve a precise balance of performance and reliability. Upgrade from a standard deck jet to a premier, high end Laminar Deck Jet design.

STAINLESS STEEL PRECISION NOZZLE

A high performance stainless steel nozzle is the premier choice for quality and durability.

PREMIER FILTER MEDIA

Six layers of soft and safe filtration media that are easy to clean and inexpensive to replace. No more complicated metal screens!

TANGENTIAL FLOW ENGINEERING

Precisely engineered internal flow reduces turbulence for a glass-like laminar flow, maximizing the high-end style and minimizing water entry splash.

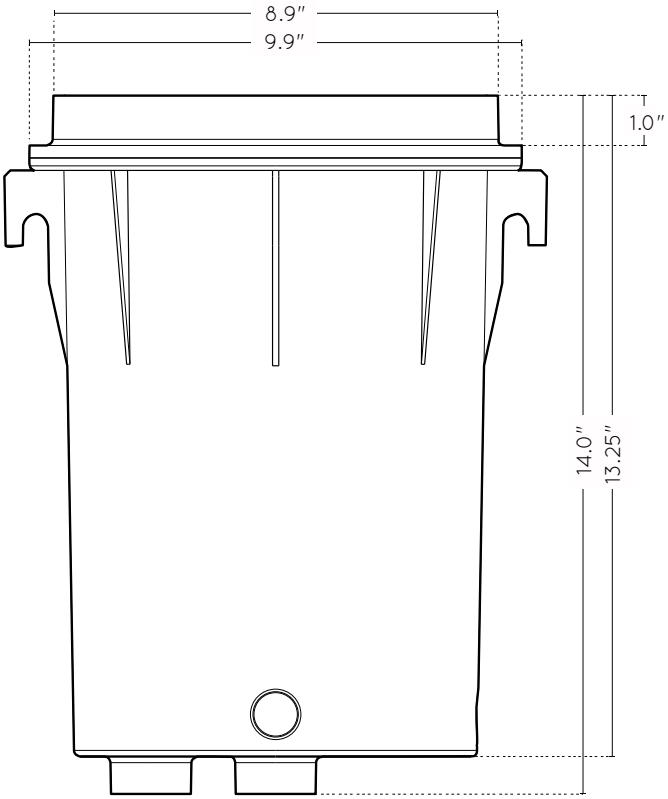

SIDE VIEW DIMENSIONS

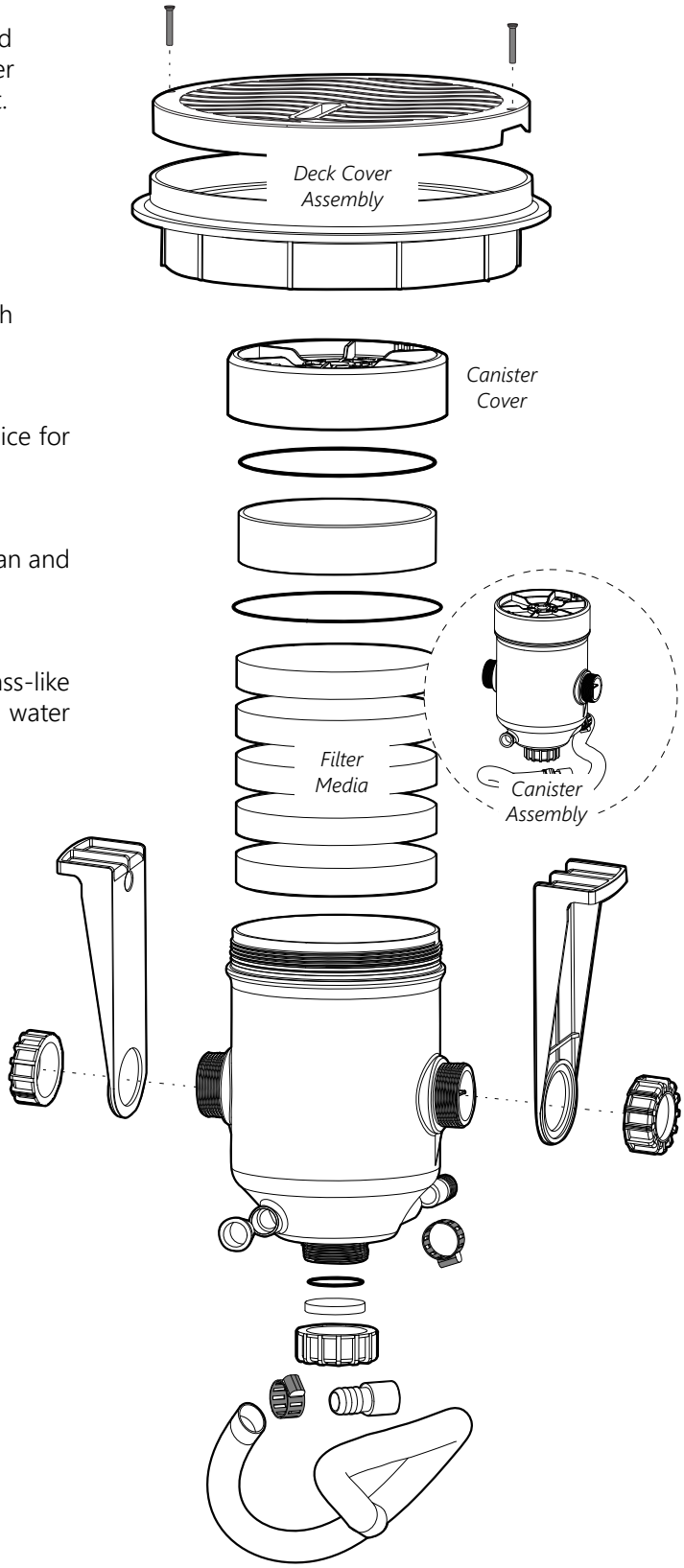

EXPLODED COMPONENT VIEW

LAMINAR DECK JET PERFORMANCE & FAQ

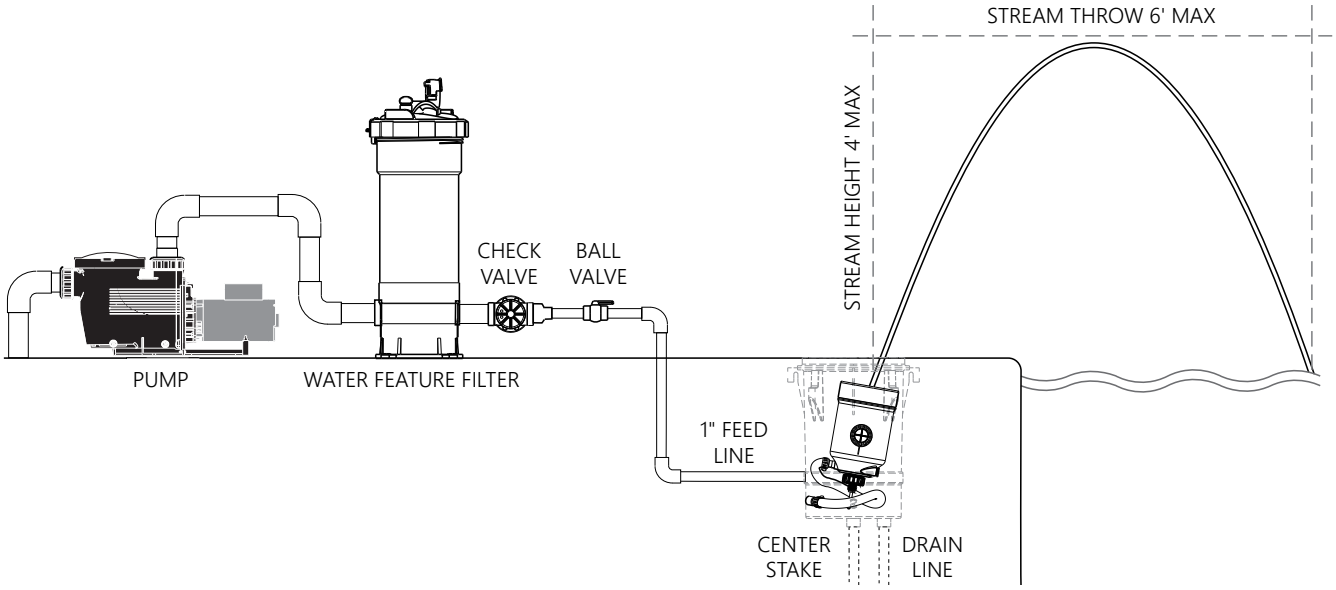

MAX HEIGHT AND THROW
Recommended maximums are based on laboratory performance testing under optimum conditions, for best laminar stream quality. External factors as well as your desired look and feel will affect maximum throw.

WINTERIZATION
Remove the deck cover and disconnect the water line below the laminar canister. Blow all water lines clear. Remove the canister assembly and pour out any remaining water in the body. Store the canister and hardware in a safe, dry location.

8.5" LAMINAR DECK JET PERFORMANCE GUIDE			
	2.5 GPM	3.0 GPM	3.5 GPM
INLET PRESSURE	3.8 PSI	5.0 PSI	6.5 PSI
RECOMMENDED MAXIMUM HEIGHT	2 FT	3 FT	4 FT
RECOMMENDED MAXIMUM DISTANCE	3 FT	4.5 FT	6 FT
STREAM DIAMETER	0.35 INCHES Ø		

FREQUENTLY ASKED QUESTIONS

Does the water to the Laminar Deck Jet need to be filtered?
The Laminar water supply must be filtered by a cartridge filter and be installed with a check valve. Do not use a sand filter.

How do I fix poor stream quality?
Remove the deck housing and check for leaks. You may also need to check your pump for leaks or a pressure drop. Poor stream quality can also be due to dirty filter media.

How do I clean the filter media?
Remove deck housing lid and pull canister out of housing. Unscrew deck canister cover and remove filter media. Run low pressure water through the filter media to remove any excess debris. Do not use detergents or cleaning chemicals on the filter media.

Can I install multiple laminar deck jets together?
Yes! Each laminar should have a valve installed on the line to balance the flow. Create a plumbing manifold to connect the laminar lines so that they run off a single pump/filter line.

For more info and complete installation instructions and important notices, visit www.c-m-p.com

SCONCE STYLES & DIMENSIONS

VICTORIAN LION

MEDIUM BAROQUE LION

LARGE BAROQUE LION

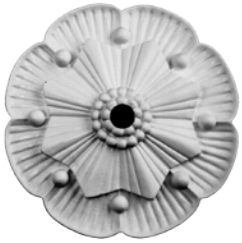

SCALLOPED

BASQUE

AEGEAN

BISCAYNE

STAR

FLEUR DE COULER

POLYNESIA

OAK ROSETTE

SCONCE DIMENSIONS				
	STYLE	LENGTH	WIDTH	DEPTH
LION	VICTORIAN LION	6-1/2"	6-1/2"	4-1/2"
	MED BAROQUE LION	8"	9"	4-3/4"
	LG BAROQUE LION	12"	10-1/4"	4-1/4"
ORNAMENTAL	SCALLOPED	8-1/4"	8-1/4"	1"
	BASQUE	7″	7″	1"
	AEGEAN	7-1/2"	6⅝"	1-1/4"
	BISCAYNE	7"	7"	1-1/2"
	STAR	6-1/2"	6-1/2"	1"
	FLEUR DE COULER	7"	8-3/4"	4"
SHELF	POLYNESIA	6-3/4"	7-1/8"	4-1/4"
	OAK LEAF ROSETTE	4-3/4"	4-3/4"	1″

SCONCE INSTALLATION GUIDE & FAQ

All style wall sconces are designed to be installed on a vertical surface using marine grade silicone or similar material. Plumbing should be installed through the pool or fountain wall exactly where the sconce will be located.

A valve should be installed on each sconce line. For multiple sconces, a valve is needed for adjustment of each individual sconce.

1. Install 3/4" pipe in pool wall at the location of the sconce. Flush the line to clear debris.
2. Place sconce over the pipe location. Measure and align the sconce and mark its location. Measure the pipe length from the wall to the socket and trim the pipe.
3. Apply silicone or other construction adhesive in a continuous bead around the back of the sconce. Also apply adhesive to the pipe and the sconce inner socket. Always follow the instructions for your selected adhesive to ensure the best quality installation. Remove excess adhesive in and around the sconce "mouth" to ensure proper flow.
4. In the event the adhesive alone does not hold the sconce in place initially, secure the sconce with tape or similar means until the adhesive fully cures.

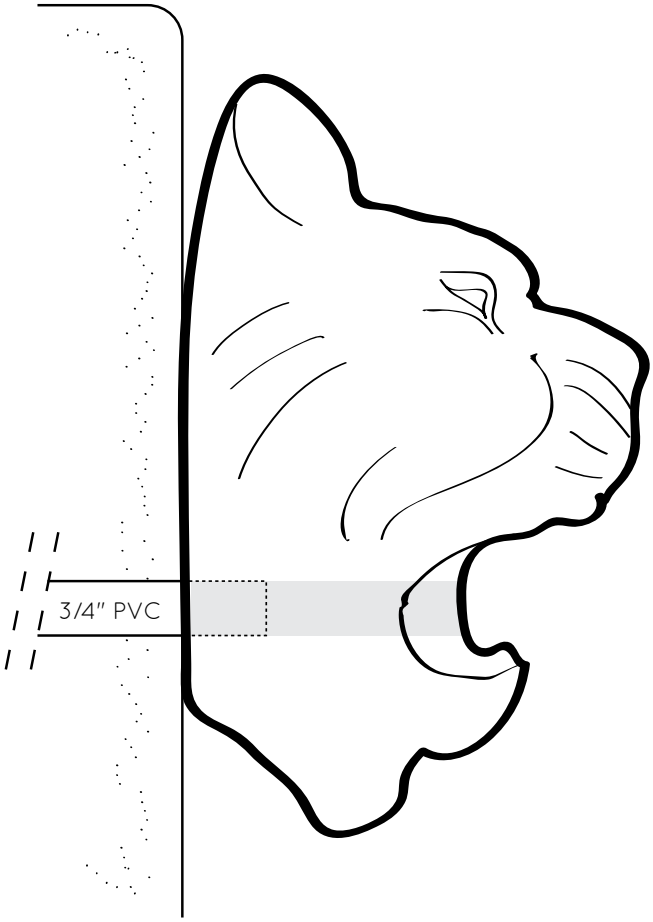

SCONCE COLOR & FINISH

Natural Wonders™ Wall Sconces have been artfully crafted to mimic natural materials. Slight variations in color and finish that enhance the natural appearance of these accents should be expected.

LOCATING THE PIPE

The 3/4" mounting hole is not located in the exact vertical center of every sconce style. Many styles are asymmetrical by design. *(see above illustration)* To ensure intended final mounting location, use the sconce to mark the correct install location for the 3/4" pipe before installing the water line.

Where can sconces be mounted?

Natural Wonders sconces can be mounted on any masonry or other suitable surface using a variety of construction adhesives. They are all easy to plumb using 3/4" pipe.

Why does one sconce have more flow than others installed in the same pool?

The supply of water is not balanced correctly. To get equal flow from each wall sconce, adjust the valves at each sconce until the desired flow is achieved. For multiple sconces, a valve should be used for adjustment of each sconce.

What size pump is required for wall sconces?

The pump size required will vary depending on waterfall size, pipe size, plumbing, etc.

CUSTOMER RESOURCES

LOCATIONS

CORPORATE HEADQUARTERS
CMP EAST DISTRIBUTION
36 HERRING ROAD, NEWNAN, GA 30265
TOLL FREE: 1-800-733-9060
LOCAL: 770-632-7112
FAX: 770-632-7115
INFO@C-M-P.COM

CMP WEST DISTRIBUTION
1651 SOUTH CARLOS AVE, ONTARIO, CA 91761

CMP AUSTRALIA & NEW ZEALAND
(CSN GLOBAL PARTY LTD)
SALES@CSNGLOBAL.COM.AU
ONLINE: CSNGLOBAL.COM.AU

CMP EUROPE DISTRIBUTION
VELUWEZOOM 32, 1327 AH ALMERE, NL
INTERNATIONAL@C-M-P.COM

POOL SALES / PRODUCT INFO

MONDAY - FRIDAY: 8:00AM - 5:00PM (EST)
POOLSALES@C-M-P.COM
ONLINE: C-M-P.COM/FIND-A-REPRESENTATIVE

CUSTOMER SERVICE / ORDERS

MONDAY - FRIDAY: 8:00AM - 6:00PM (EST)
1-800-733-9060
CS@C-M-P.COM
FAX: 770-632-7115
ONLINE: C-M-P.COM/CUSTOMER-SERVICE

TECHNICAL SUPPORT

MONDAY - FRIDAY: 8:00AM - 5:00PM (EST)
1-800-733-9060 EXT 220
SUPPORT@C-M-P.COM

WARRANTY/RMA
RMA@C-M-P.COM

MARKETING

To request product literature and other CMP Marketing resources, contact CMP Customer Service or your pool sales rep.

ONLINE

Visit WWW.C-M-P.COM for product info, resources, videos, news and support.

CATALOG: C-M-P.COM/CATALOG
ONLINE RESOURCES: C-M-P.COM/DOWNLOADS

THE PREMIER SUPPLIER OF POOL, SPA & BATH COMPONENTS

Pool, Spa and Bath industry professionals around the world all depend on CMP. If you are a spa designer, pool builder, bath manufacturer or retail store owner, you can depend on CMP products, service and support. Because when the difference is in the details, everything matters®.

everything matters.

www.c-m-p.com
1-800-733-9060
ORDERS: CS@c-m-p.com
PRODUCT INFO: PoolSales@c-m-p.com

36 HERRING ROAD, NEWNAN, GA 30265